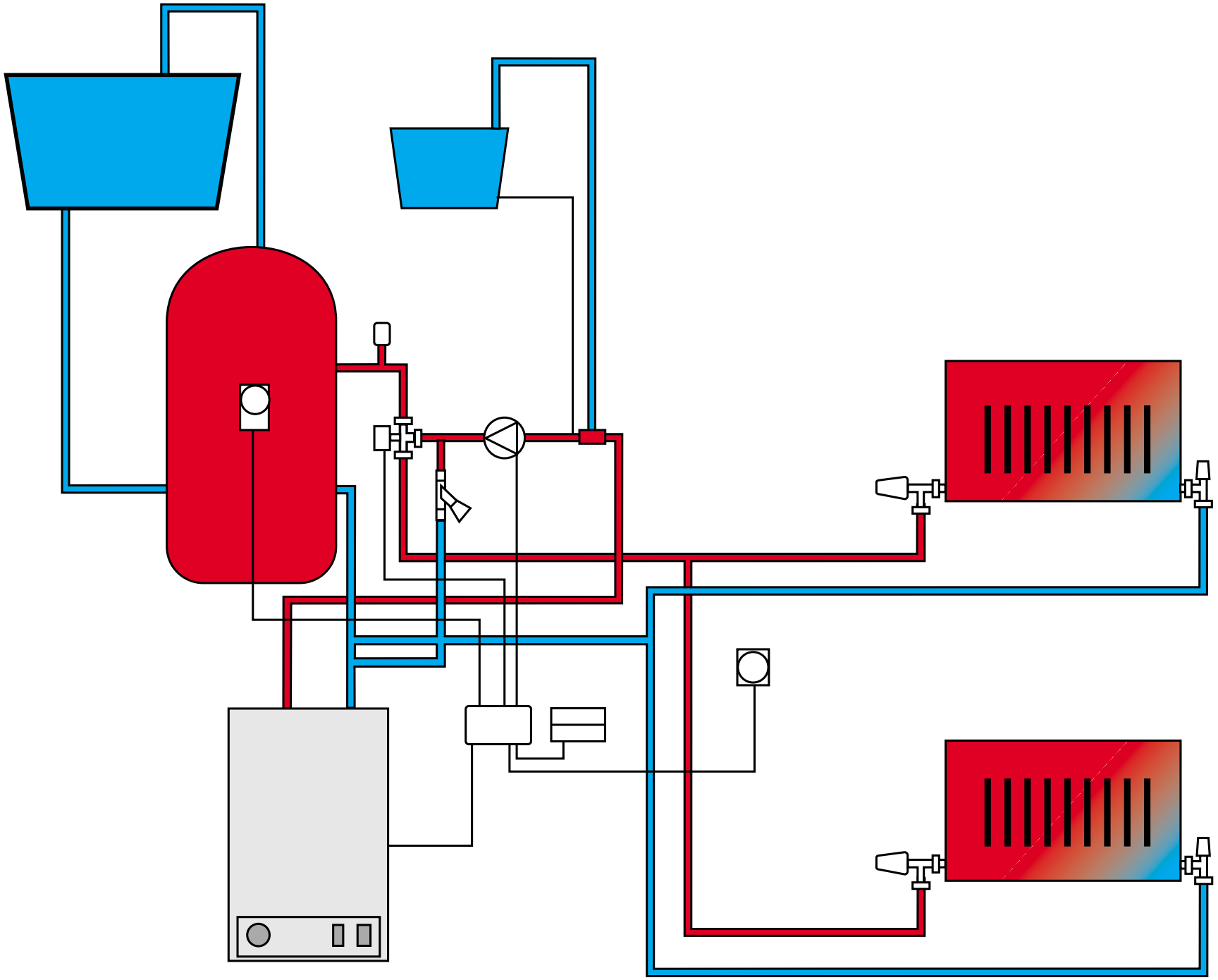Conventional System